Lecture 4: Functional Dependency

-

5. Functional Dependency

Functional dependencies are the relationships among the attributes within a relation. Functional dependencies provide a formal mechanism to express constraints between attributes. If attribute A functionally depends on attribute B, then for every instance of B you will know the respective value of A. Attribute "B" is functionally dependent upon attribute "A" (or collection of attributes) if a value of "A" determines or single value of attributes "B" at only one time functional dependency helps to identify how attributes are related to each other.

(1) Notation of Functional Dependency

The notation of functional dependency is A → B.

The meaning of this notation is:

1. "A" determines "B"
2. "B" is functionally dependent on "A"
3. "A" is called determinant
4. "B" is called object of the determinant

Student ID → GPA. The meaning is the grade point average (GPA) can be determined if we know the student ID.

Student ID	Name	GPA

Let us consider another example of functional dependency,

Child→Mother

Every child has exactly one mother. The attribute mother is functionally dependent on the attribute child. If we specify a child, there is only one possible value for the mother. A functional dependency A→B is said to be trivial if B ⊆ A.

(2) Compound Determinants

More than one attribute is necessary to determine another attribute in an entity, and then such a determinant is termed as composite determinant.

For example, the internal marks and the external marks scored by the student determine the grade of the student in a particular subject. Internal mark, external mark → grade.

Since more than one attribute is necessary to determine the attribute grade it is an example of compound determinant.

(3) Full Functional Dependency

An attribute is fully functionally dependent on a second attribute if and only if it is functionally dependent on the second attribute but not on any subset of the second attribute.

(4) Partial Functional Dependency

This is the situation that exists if it is necessary to only use a subset of the attributes of the composite determinant to identify its object.

Example:

Roll No	Subject Number	Hall Number	Grade

Full Functional Dependency

The roll number and subject number determines the grade. It implies that a student may be interested in a particular subject; in that subject the grade secured by that student will be good. It is not necessary that the same student get good grade in all the subjects. Hence the grade depends on the subject number.

Roll No, Subject Number→Grade

Partial Functional Dependency

With respect to examination schedule, it is not necessary that all the subjects should be held in the same examination hall. Hence hall number depends on both the subject number and the roll number. Hall number depends on subject number is only partial functional dependency because the hall number also depends on the roll number of the student.

Subject Number→Hall Number

(5) Transitive Dependency

A transitive dependency exists when there is an intermediate functional dependency.

Notation

A→ B, B→ C, and if A→ C then it can be stated that the transitive dependency exists.

A→ B→C

Example 2

Consider the example of the relation STAFF. The attributes associated with the STAFF are Staff number which is unique to each staff, the designation of the staff like Manager, Deputy Manager, and Managing Director, etc. The last attribute is the salary associated with the staff.

STAFF

STAFF NUMBER	DESIGNATION	SALARY

It is to be noted that the staff number determines the designation. The designation obviously determines the salary. For example the manager will get more salary than the deputy manager. On the other hand the staff number determines the salary.

STAFF NUMBER → DESIGNATION

DESIGNATION → SALARY

STAFF NUMBER → SALARY

There is a transitive dependency between STAFF NUMBER and SALARY.

6. Functional Dependency Inference Rules (Armstrong's Axioms)

(1) Reflexivity

If $Y \subseteq X$ then, $X \rightarrow Y$. The axiom of reflexivity indicates that given a set of attributes the set itself functionally determines any of its own subsets.

(2) Augmentation

If X→Y and Z is a subset of table R (i.e., Z is any set of attributes in R), then XZ→YZ. The axiom of augmentation indicates that we can augment the left side of the functional dependency or both sides conveniently with one or more attributes. The axiom does not allow augmenting the right-hand side alone. The augmentation rule can be diagrammatically represented as follows:

If X→Y then XZ→Y

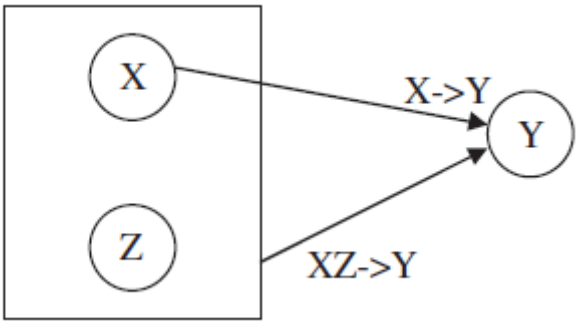

A second variation of augmentation is diagrammatically shown below:

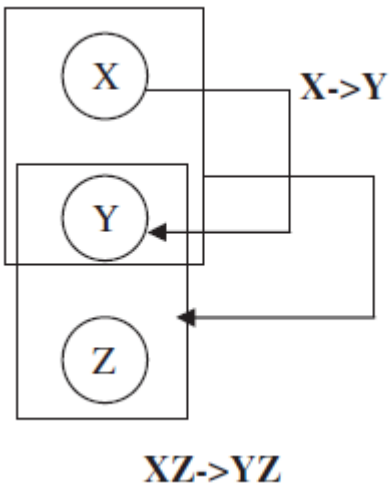

(3) Transitivity

If X→Y and Y→Z then X→Z. The axiom of transitivity indicates that if one attribute uniquely determines a second attribute and this, in turn, uniquely determines a third one, then the first attribute determines the third one. Consider three parallel lines X, Y, and Z. The line X is parallel to line Y. The line Y is parallel to line Z then it implies that line X is parallel to line Z.
This property is called transitivity.

(4) Pseudotransitivity

If X→Y and YW→Z then XW→Z. Transitivity is a special case of pseudotransitivity when W is null. The axiom of pseudotransitivity is a generalization of the transitivity axiom.

(5) Union

If X→Y and X→Z then X→YZ. The axiom of union indicates that if there are two functional dependencies with the same determinant it is possible to form a new functional dependency that preserves the determinant and has its right-hand side the union of the right-hand sides of the two functional dependencies.

The union rule can be illustrated with the example of PINCODE. The PINCODE is used to identify city as well as PINCODE is used to identify state. This implies that PINCODE determines both city and state

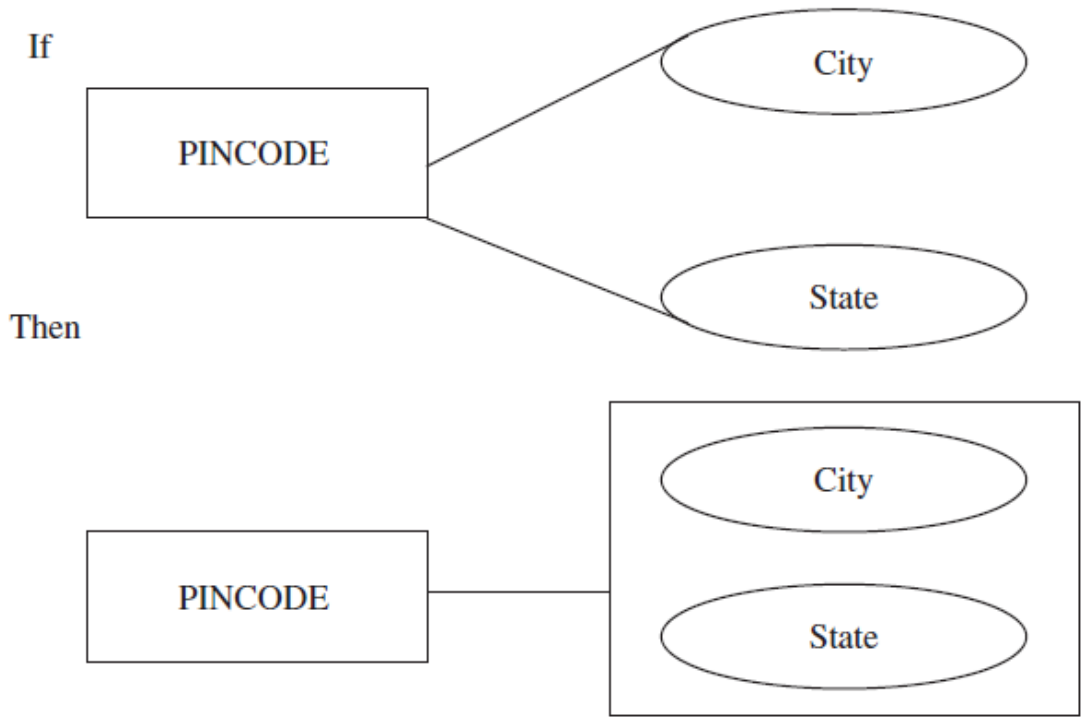

(6) Decomposition

If X→YZ then X→Y and X→Z. The axiom of decomposition indicates that the determinant of any functional dependency can uniquely determine any individual attribute or any combination of attributes of the right-hand side of the functional dependency.
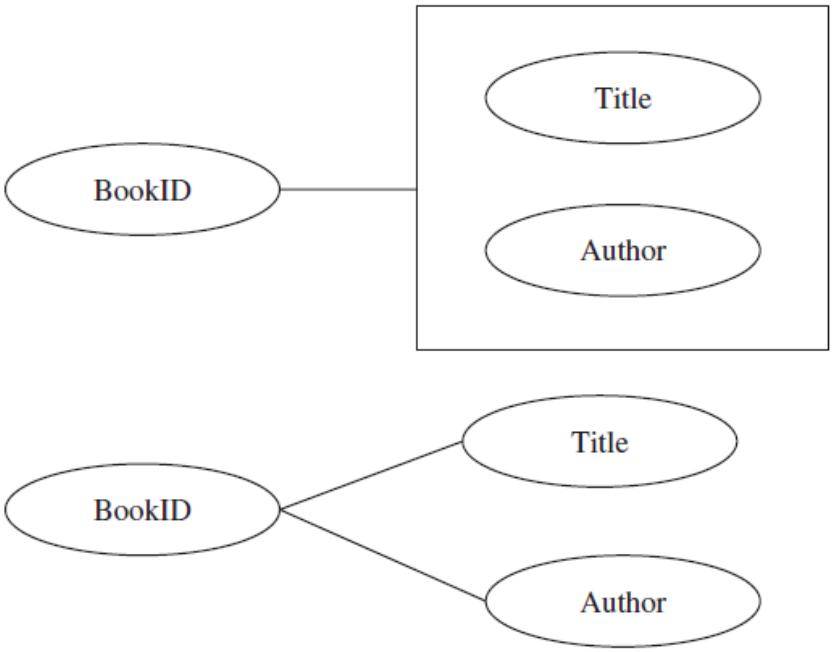
The decomposition can be illustrated with an example of Book ID. The BookID determines the title and the author similar to (X→YZ) which implies that BookID determines title(X→Y) and BookID determines Author (X→Z)